USER MANUAL

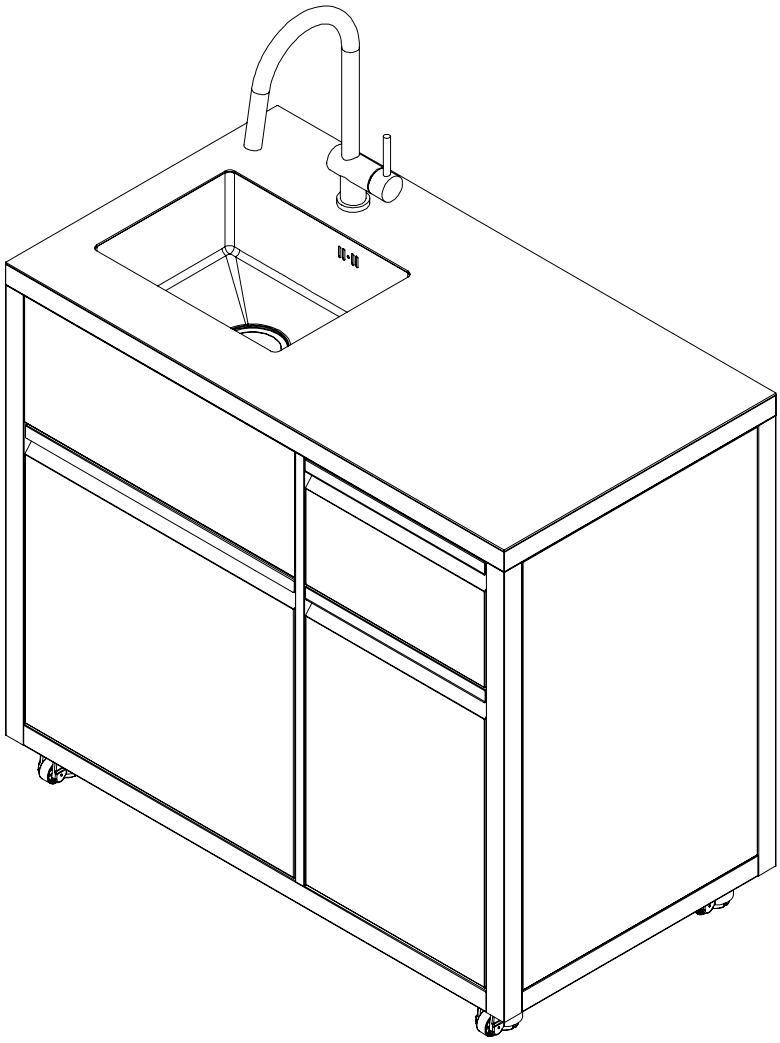

Description: Outdoor Kitchen Module with Sink
Article number: TE001A01

Thank you for purchasing this product!







Product Identification

Technical Specifications

Product Name: Outdoor Kitchen Module with Sink
Model: TE001A01
Responsible for EU Market Placement: Dancoll Design AB
Materials: Powder-coated steel, stainless steel
Shelf Load Capacity: 15 kg
Use: Outdoor, domestic use
Assembly: Back panel and faucet must be installed
Storage: Suitable for covered outdoor areas or indoor storage

Regulatory Compliance

This product complies with the General Product Safety Regulation (EU) 2023/988. Materials and coatings are suitable for outdoor use and meet relevant safety standards.

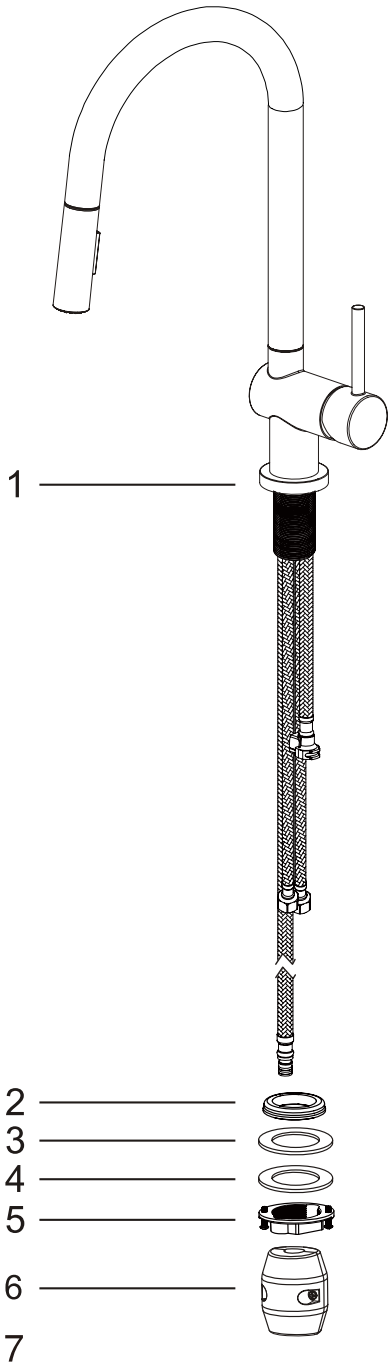

Parts List

No.	Name
1	Faucet
2	Rubber ring
3	Rubber ring
4	Metal plate
5	Fixing nut
6	Weight
7	Cabinet body

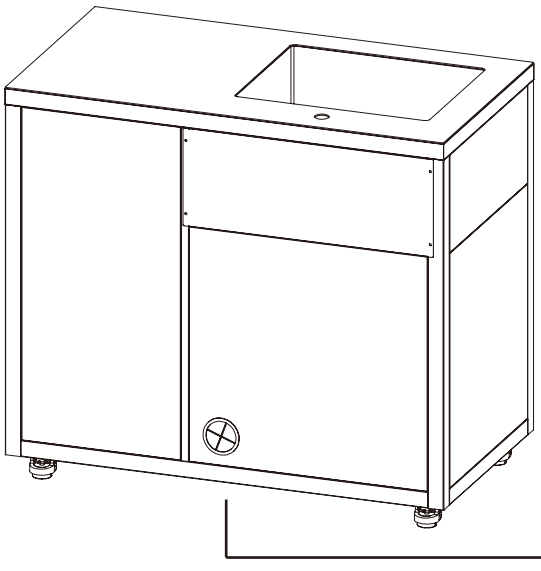

Safety Warnings

- Read this user manual in full before starting assembly or installation.
- Do not climb or sit on the unit.
- Ensure stability on uneven surfaces.
- Keep children supervised around the unit.
- Ensure water connections are properly tightened and check for leaks before use.

Assembly Instructions

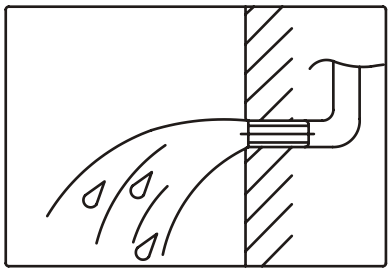

Important Note:
Before starting assembly, clean the water pipes to remove impurities and sludge to avoid faucet obstruction.

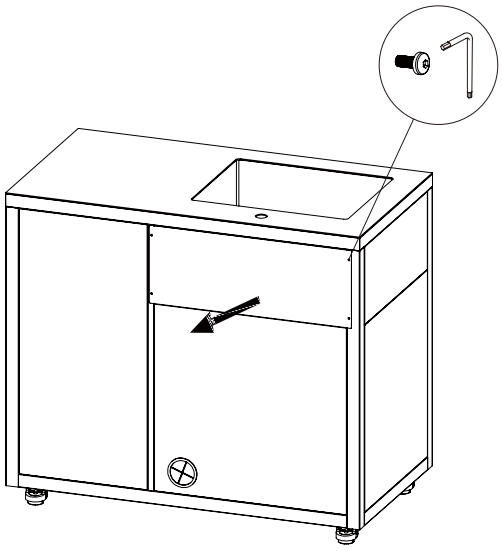

(Draft 1)

1. Place the unit on a flat surface.
2. Remove the back panel **(Draft 1)**.
3. Clean the pipe.
4. Install the faucet securely according to the steps below:

A. Before installation, make sure there is a hole (Φ35 mm) on the table top. Refer to draft (A).

B. Put the two inlet pipes of the faucet body through the hole which is on the table top. Make sure the washer is on the body. Refer to draft (B).

C. Put the plastic washer and metal washer on the fixing screw and tighten the fixing nut to fix the faucet on the table top. Refer to draft (C).

D. Use the weight ball to clamp the pull out hose, and tighten with the screw, then put the joint of the pull out hose to the joint of the flexible hose. Refer to draft (D).

E. Connect the angle valve and tighten it by wrench. Close the switch of faucet and open the switch of angle valve, keep pressure for 30 minutes, to check if it leaks at all connections. Refer to draft (E).

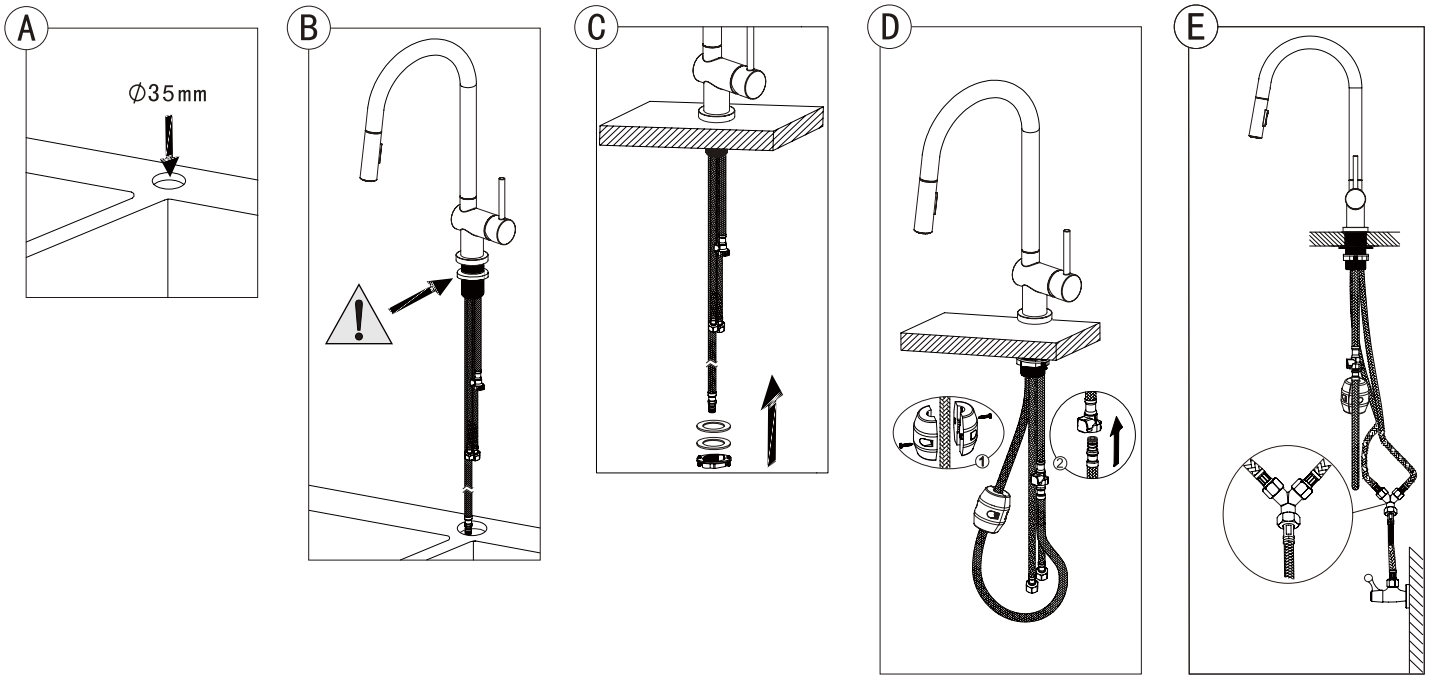

5. Connect the hoses;
- Attach the flexible hoses to the faucet body **(Draft 2)**.
- Ensure washers are correctly positioned before tightening
  Important: Do not overtighten the connections, as this can damage hoses, pipes, and washers.
- Secure the hoses using the fixing nut and metal plate as shown.
- Attach the pull-out hose and weight ball according to the diagram.
- Ensure all parts are properly fitted.

6. Reattach the back panel. **(Draft 3)**.

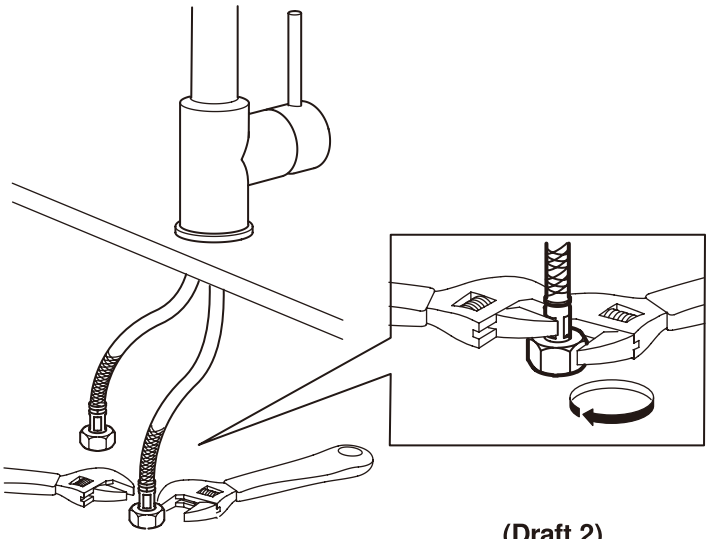

(Draft 2)

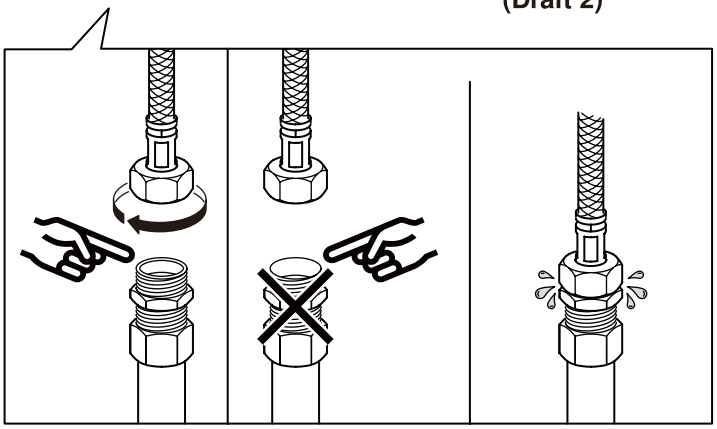

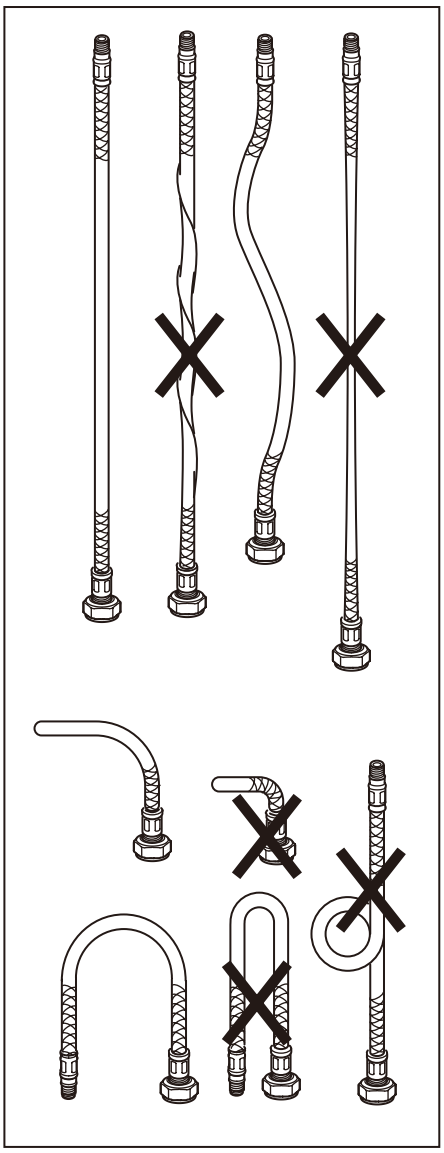

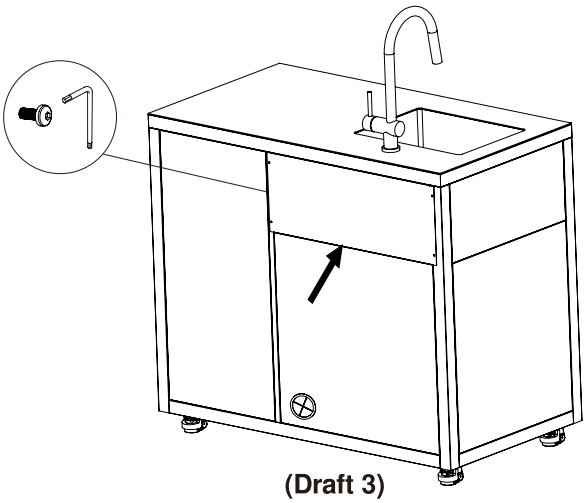

(Draft 3)

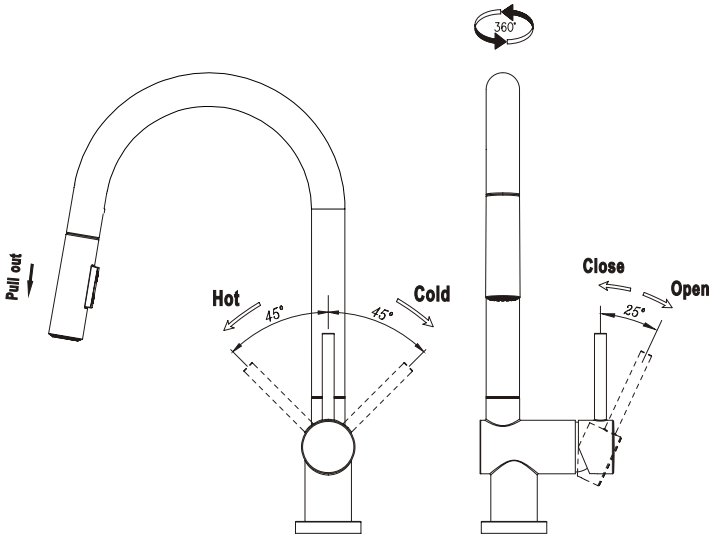

Faucet Operation

- Upturn the handle to open the water.
- The larger the angle is, the larger the flow is.
- Handle in upright position closes the water flow
- Turn left the handle, more hot water:
- Turn right the handle, more cold water
- The spout can be 360 degree rotated.

Usage Guidelines

• Use the product for food preparation and cleaning only.
• Do not exceed 15 kg load in the drawers.
• Avoid storing flammable or hazardous materials.
• **Cleaning stainless steel sinks:**
- Wipe the sink with a damp cloth or sponge and mild washing-up detergent if necessary.
- Rinse with water and dry with a clean cloth to prevent lime stains.
- Remove any detergent residue to avoid marks.
- Do not leave chlorinated liquids in the bowl or on the sink for several hours, as chlorine can damage the surface and make it matt.
- Stubborn stains can be removed with a soft brush or nylon sponge and liquid cleaner (do not use abrasives).
- Always rinse and dry the sink after cleaning, wiping lengthwise along the sink.

Maintenance & Cleaning

• Before first use: unscrew the aerator/flow guide and let water run through the tap for a few minutes, then screw it back on.
• For daily cleaning: use a soft damp cloth with mild washing-up detergent or soap if needed.
• Never use scouring powder, steel wool, calcium-dissolving agents, alcohol, or abrasives.
• Rinse with water and dry/polish with a clean dry cloth.
• To remove calcium deposits: use ordinary white vinegar diluted in water, then rinse with plain water.
• Remove and clean the aerator occasionally; if calcium has built up, soak it in vinegar solution.
• Clean any filters on the tap by rinsing with clean water once a year.
• **For outdoor use:**
- To protect the tap from frost damage, completely drain it by disconnecting the water supply and opening the tap (max. 1 minute) to allow all remaining water to drain.
- Store the tap in a frost-free room.
- Water is not suitable for drinking if the tap is connected to a garden hose.
• **Good to know:**
- Discoloration is usually caused by foreign material (e.g., iron particles), not rust in the steel.
- Never use hard or sharp tools that can scratch the surface.
- Keep this manual for future reference.

Troubleshooting

Issue	Possible Cause	Solution
Water not flowing from faucet	Faucet not properly connected	Check water inlet and ensure faucet is securely installed
Water leakage	Loose connection or damaged seal	Tighten fittings and inspect for damage; replace seal if needed
Rust spots appearing	Damaged powder coating	Clean affected area and repaint with suitable outdoor metal paint
Sink draining slowly	Blockage in drainage	Check and clear drain pipe or trap
Unit feels unstable	Uneven ground or loose feet	Adjust feet and ensure unit is placed on a level surface