USER MANUAL

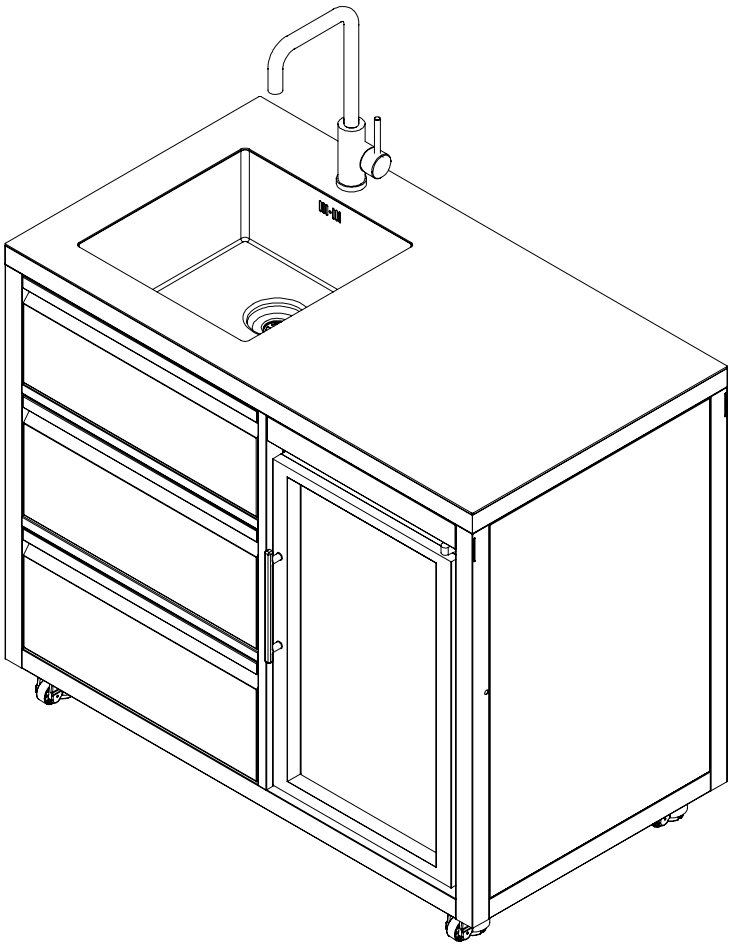

Description: Outdoor Kitchen Module with Sink & Refrigerator
Article number: TA017B01

Thank you for purchasing this product!

Product Identification

Technical Specifications

Product Name: Outdoor Kitchen Module with Sink & Refrigerator
Model: TA017B01
Materials: Powder-coated steel, stainless steel
Shelf Load Capacity: 15 kg
Use: Outdoor, domestic use
Assembly: Back panel and faucet must be installed
Storage: Suitable for covered outdoor areas or indoor storage

Regulatory Compliance

This product complies with the General Product Safety Regulation (EU) 2023/988. Materials and coatings are suitable for outdoor use and meet relevant safety standards.

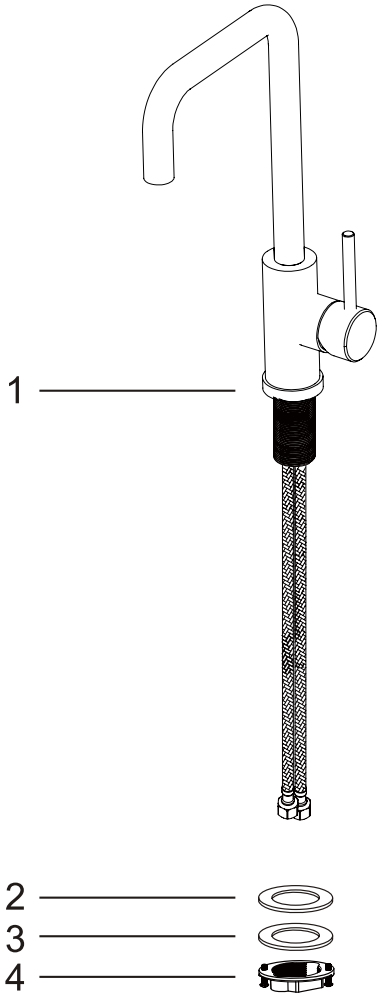

Parts List

No.	Name
1	Faucet
2	Rubber ring
3	Metal plate
4	Fixing nut
5	Cabinet body
6	Black panel

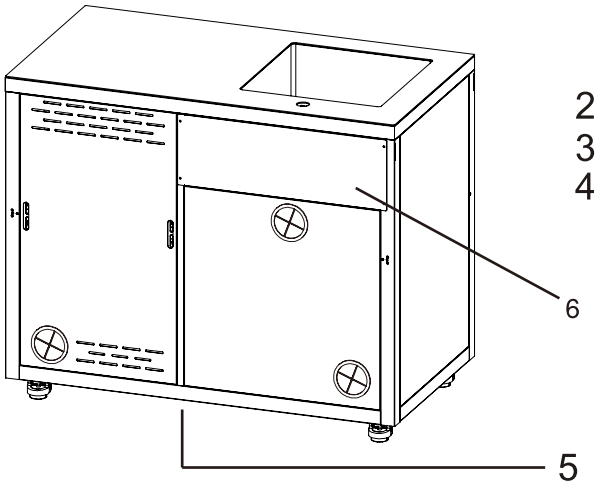

Safety Warnings

- Read this user manual in full before starting assembly or installation.
- Do not climb or sit on the unit.
- Ensure stability on uneven surfaces.
- Keep children supervised around the unit.
- Ensure water connections are properly tightened and check for leaks before use.

Refrigerator's **Technical Specifications**

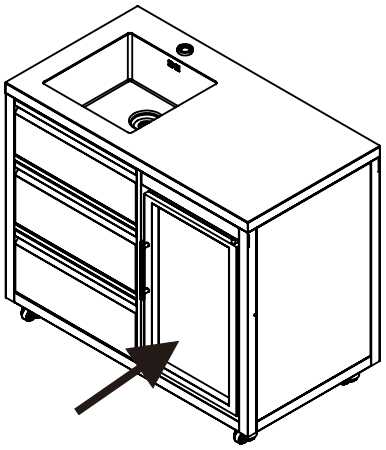

- **Refrigerator Volume:** 63L
- **Voltage:** 220–240 V~, 50–60 Hz
- **Power:** 85 W
- **Climate Class:** SN-T(16°C-43°C)

- **Refrigerant:** R600a (18 g) – GWP <150
- **IP Rating:** IPX4

Symbols on product and in this manual:

- **Warning Triangle** – Important safety instructions
- **IPX4** – Protected against splashing water (not immersion)
- **WEEE (crossed-out wheeled bin)** – Dispose of electrical components at authorized recycling facilities
- **CE** / **UKCA** – Complies with EU and UK safety requirements

Safety Warnings

WARNING: Risk of fire / flammable materials

- **WARNING**: Keep ventilation openings, in the appliance enclosure or in the built-in structure, clear of obstruction.
- **WARNING**: Do not damage the refrigerant circuit.
- **WARNING**: Do not use electrical appliances inside the food storage compartments of the appliance, unless they are of the type recommended by the manufacturer.

General Safety & Usage

- Read all instructions before use.
- Connect only to a grounded outlet.
- **IPX4** protects against splashing water, **not full water exposure**. Do not immerse the refrigerator or expose it to heavy rain.
- Keep out of reach of children.
- Do not overload shelves or countertop.
- Avoid direct sunlight and frost without protective cover.
- If powder coating is damaged, repair immediately to prevent corrosion.

Assembly Instructions

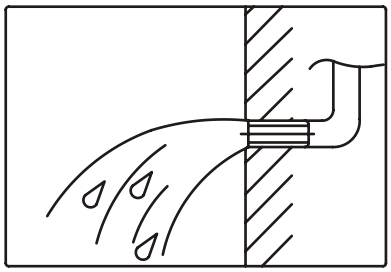

Important Note:
Before starting assembly, clean the water pipes to remove impurities and sludge to avoid faucet obstruction.

1. Place the unit on a flat surface.
2. Remove the back panel **(Draft 1)**.
3. Clean the pipe.
4. Install the faucet securely according to the steps below:

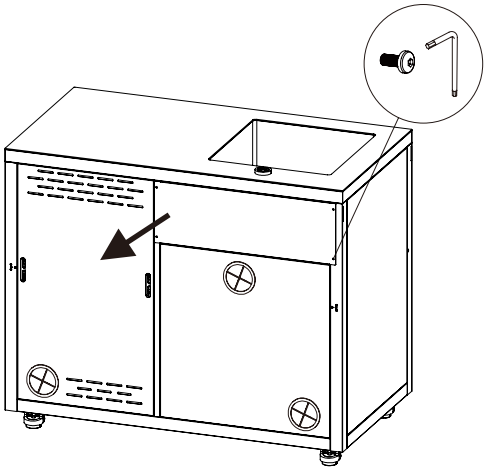

(Draft 1)

A. Put the two inlet pipes of the faucet body through the hole which is on the table top. Refer to draft (A).

B. Connect the angle valve and tighten it by wrench. Close the switch of faucet and open the switch of angle valve, keep pressure for 30 minutes, to check if it leaks at all connections. Refer to draft (B).

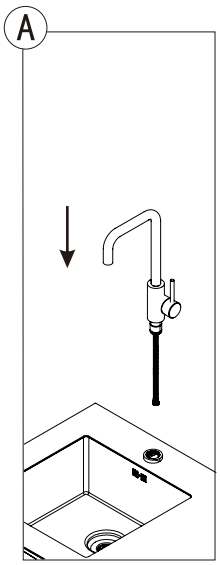

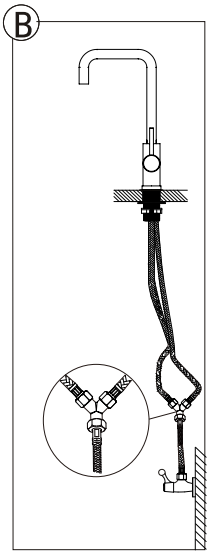

5. Connect the hoses;
- Attach the flexible hoses to the faucet body **(Draft 2)**.
- Ensure washers are correctly positioned before tightening
  Important: Do not overtighten the connections, as this can damage hoses, pipes, and washers.
- Secure the hoses using the fixing nut and metal plate as shown.
- Attach the pull-out hose and weight ball according to the diagram.
- Ensure all parts are properly fitted.

6. Reattach the back panel. **(Draft 3)**.

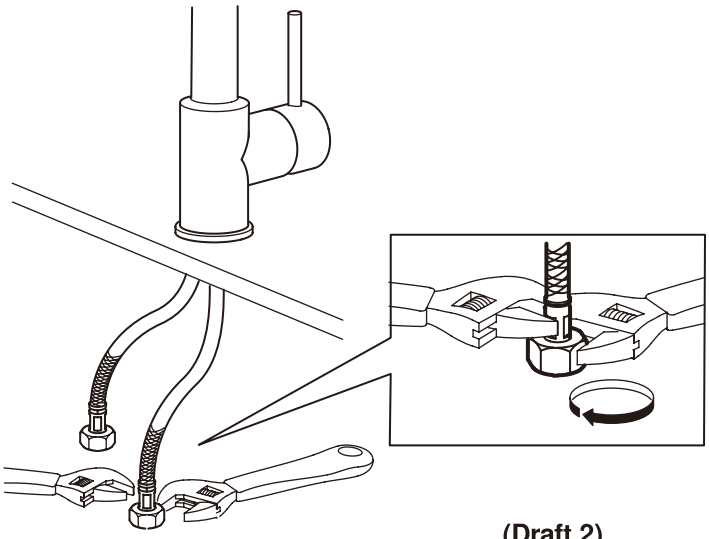

(Draft 2)

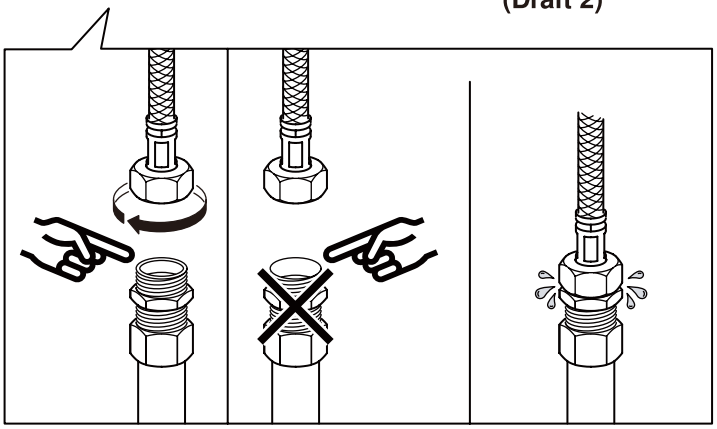

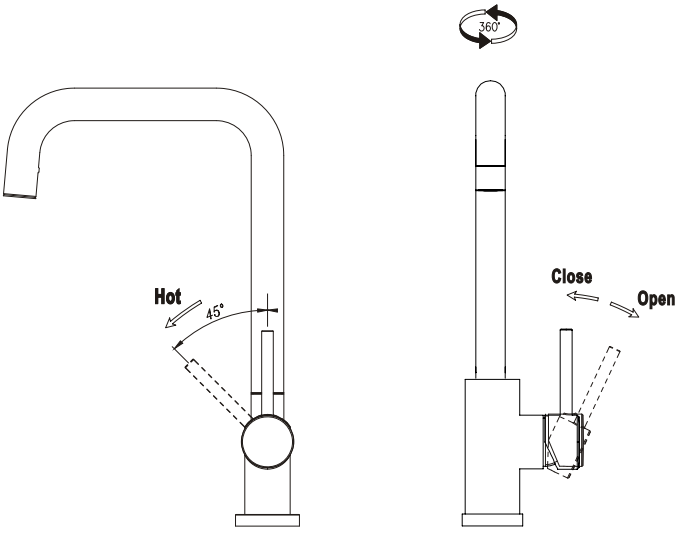

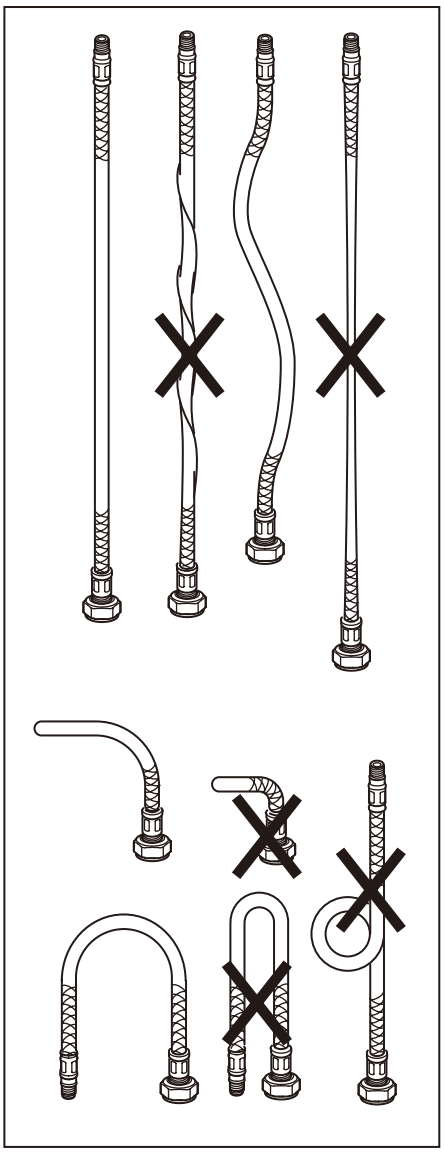

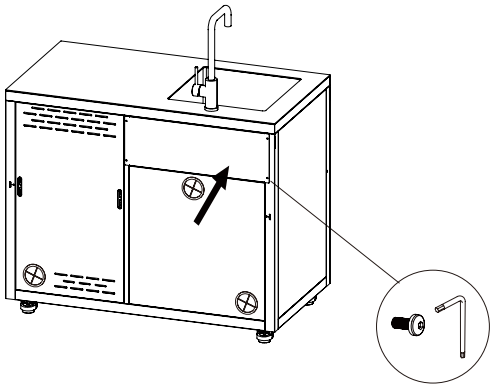

(Draft 3)

• Place the module on a flat, stable surface.
• Lock the casters after positioning.
• Connect the refrigerator to a suitable power outlet.
• Ensure proper ventilation around the refrigerator.
• Handle Installation:
a. Find the handle inside the fridge and position it on the front door.
b. Lift the door gasket to locate the screw holes.
c. Insert the screws provided through the handle into the holes.
d. Tighten the screws using a suitable screwdriver until the handle is firmly secured.
e. Put the gasket back in place after the handle is installed.
f. Check that the handle is straight and securely attached before use.

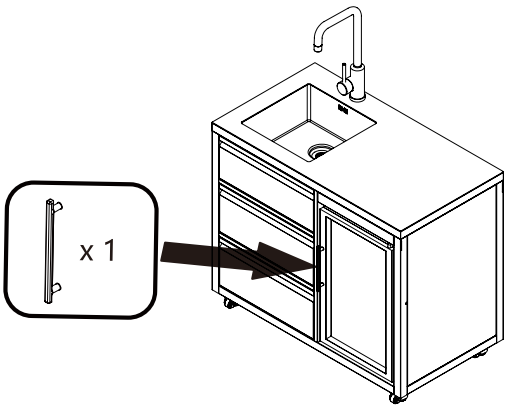

Detach the adhesive tape and secure with screws



Usage Guidelines
• Recommended ambient temperature: 16°C-43°C
• Use protective cover during winter or heavy rain.
• Do not store perishable food requiring freezing (wine cooler type).
• Maximum load per shelf: 15 kg. Do not exceed this limit to avoid damage to the appliance or risk of injury.
• **Storing:** If possible, store your metal outdoor furniture in a dry place indoors. When stored outside, tilt the furniture and preferably use water-repellent covers. Make sure air can circulate to avoid moisture.

Maintenance & Cleaning
• Clean with mild soapy solution; avoid abrasive cleaners.
• Inspect powder coating regularly; repair if damaged.
Repair: If the powder coating comes off, rust may occur. To repair, wipe clean and repaint to restore protection.
• Do not use steel wool or sharp tools on stainless steel surfaces.
• Damp surfaces can be discoloured if substances containing iron remain on them.
• Matt parts can be shiny again if sprinkled with chalk, rubbed with a soft cloth, rinsed with water and wiped.

Troubleshooting
• Refrigerator not cooling → Check power supply and thermostat.
• Door not sealing → Inspect gasket and clean.
• Excessive condensation → Ensure proper ventilation.

Energy & Environmental Information
• Complies with EU Ecodesign and Energy Labelling Regulations.
• Dispose of according to WEEE Directive.

Disposal and Recycling (WEEE) This product is an electrical appliance and must not be disposed of with unsorted municipal waste. The crossed-out wheeled bin symbol indicates that the product requires separate collection. Please dispose of waste equipment at a designated collection point in accordance with local regulations. Note that the refrigerator contains refrigerant which requires professional handling during disposal.

Usage Guidelines

• Use the product for food preparation and cleaning only.
• Do not exceed 15 kg load in the drawers.
• Avoid storing flammable or hazardous materials.
• **Cleaning stainless steel sinks:**
- Wipe the sink with a damp cloth or sponge and mild washing-up detergent if necessary.
- Rinse with water and dry with a clean cloth to prevent lime stains.
- Remove any detergent residue to avoid marks.
- Do not leave chlorinated liquids in the bowl or on the sink for several hours, as chlorine can damage the surface and make it matt.
- Stubborn stains can be removed with a soft brush or nylon sponge and liquid cleaner (do not use abrasives).
- Always rinse and dry the sink after cleaning, wiping lengthwise along the sink.

Maintenance & Cleaning

• Before first use: unscrew the aerator/flow guide and let water run through the tap for a few minutes, then screw it back on.
• For daily cleaning: use a soft damp cloth with mild washing-up detergent or soap if needed.
• Never use scouring powder, steel wool, calcium-dissolving agents, alcohol, or abrasives.
• Rinse with water and dry/polish with a clean dry cloth.
• To remove calcium deposits: use ordinary white vinegar diluted in water, then rinse with plain water.
• Remove and clean the aerator occasionally; if calcium has built up, soak it in vinegar solution.
• Clean any filters on the tap by rinsing with clean water once a year.
• **For outdoor use:**
- To protect the tap from frost damage, completely drain it by disconnecting the water supply and opening the tap (max. 1 minute) to allow all remaining water to drain.
- Store the tap in a frost-free room.
- Water is not suitable for drinking if the tap is connected to a garden hose.
• **Good to know:**
- Discoloration is usually caused by foreign material (e.g., iron particles), not rust in the steel.
- Never use hard or sharp tools that can scratch the surface.
- Keep this manual for future reference.

Troubleshooting

Issue	Possible Cause	Solution
Water not flowing from faucet	Faucet not properly connected	Check water inlet and ensure faucet is securely installed
Water leakage	Loose connection or damaged seal	Tighten fittings and inspect for damage; replace seal if needed
Rust spots appearing	Damaged powder coating	Clean affected area and repaint with suitable outdoor metal paint
Sink draining slowly	Blockage in drainage	Check and clear drain pipe or trap
Unit feels unstable	Uneven ground or loose feet	Adjust feet and ensure unit is placed on a level surface

Warranty & Service Contact

Your outdoor cabinet is covered against defects for a period of 24 months for parts and repair or replacement.

This warranty excludes surface rust and damage caused by abuse or neglect.

Conditions of Warranty

• The appliance must be operated and maintained according to the instructions supplied in this manual.
• Any repairs not under warranty must be performed by an authorized service agent.
• Use of non-original parts will void this warranty.

To Make a Claim

• Provide proof of purchase and contact your dealer or distributor.
• Warranty covers manufacturer defects in materials, workmanship, and finish under normal use.
• This warranty does not cover damage caused by misuse, neglect, improper installation, or unauthorized modifications.
• Transportation costs, removal, and reinstallation are not covered.

Exclusions

• Rust, corrosion, or discoloration caused by heat, abrasive cleaners, or environmental conditions.

Country of Manufacture: China